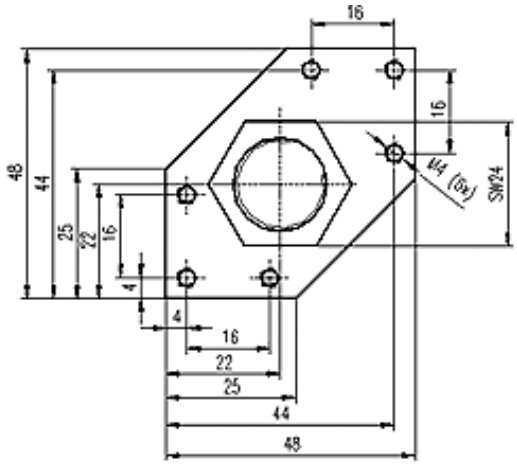

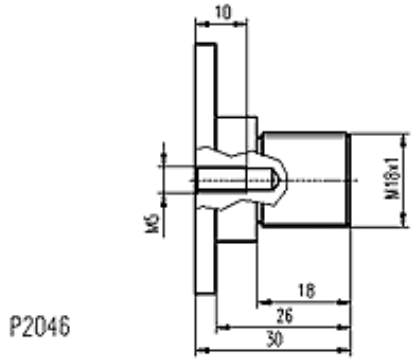

Accessories: Mounting unit BOS 21-AD-1

Common Data

Version	adapter
Usable with	for Optosensors series BOS/BKT/BLT 21M, BOS/BOD/BFS 26K, BOS/BLE/BLS 25K, for reflector BOS R-1, Usable with BOS 18.0-KB-1,BOS 18.0-HS-1

Mechanical Data

Measurements WxHxD or Dia x D	48x48x30
Material	AlMgSi0,5 F22
Weight	approx. 60g
Mounting	screws

Datasheet number::

Definitions see general catalog.
If not otherwise noted, ratings according to
IEC 60947-5-2 (DIN EN60947-5-2)

Balluff GmbH
Schurwaldstrasse 9
73765 Neuhausen a.d.F.
Phone (07158) 173-0 Fax (07158) 5010

BALLUFF
sensors worldwide